INSTRUCTION MANUAL

CVS Series 2220 Dump Valve

The CVS Series 2220 Dump Valve with pneumatic actuator is a compact economical solution for gas or liquid process. The yokeless design allows for installation in confined areas where space is limited.

The CVS Series 2220 is capable of both throttling and on/off control.

Flow characteristics are quick opening, and modified equal percentage (throttle).

The CVS 2220 body is available in both 1 and 2 inch NPT, also available in 150, 300, 600 and 1500 ANSI.

The 1” CVS Series 2220 is a T Style body, which allows flow straight though the body as it would in a globe pattern, and is able to flow in an angle pattern by placing the plug to the upper port. The 2” CVS 2220 is a Globe Style or angle connection body.

The design allows for easy inspection and maintenance if required, using a hammer-nut connection.



CVS Series 2220

Head Office
1107 8A Street
Nisku, Alberta
T9E 7R3
Canada
Office: (780) 437-3055

Calgary Sales Office
3516 114 Avenue SE
Calgary, Alberta
T2Z 3V6
Canada
Office: (403) 250-1416
Fax: (403) 291-9487

Website: www.cvs-controls.com Email: info@cvs-controls.com

SPECIFICATIONS OVERVIEW

Construction Materials	
Component	Available Material
Body	LCC
Bonnet	ASTM A350LF2
Hammer Nut	ASTM A350 Gr.LF2
Stem	Nitronic 50
Packing	TFE V-Ring, Cotton Nitrile
Packing Washer	316 SST
Packing Retainer	316 SST
Packing Spring	Inconel X750
Diaphragm	Neoprene/Nylon
O-Ring, wetted	HSN
O-Ring, non-wetted	HSN
Actuator Spring	Steel
Adjusting Screw	Carbon Steel/Plated, 316SS
Diaphragm Housing	Carbon Steel
Diaphragm Plate	Carbon Steel
Travel Indicator	303SS

Operating Temperature Limits		
Model	Material	Temperature
2220	Standard LCC	-40°F to 180°F (-40°C to 82°C)

End Connections and Pressure Ratings								
Body Size		Pressure Rating		NPT	ASME Class Flanged RF and RTJ Type			Style
In	mm	Psig	bar		150/300	600	900/1500	
1	25	3750	259	Yes	Yes	Yes	Yes	Globe/T
2	50	3750	259	Yes	Yes	Yes	Yes	Globe
Standard ratings based on -20°F to 100°F (-29°C to 38°C). Contact a CVS Controls Representative for additional ratings if required								

- ****Note:** Prior to installation, inspect the CVS Series 2220 valve and actuator assembly for any visible damage or debris.
- **Always follow proper safety and lockout procedures** when installing and/or performing any required maintenance or repairs.
- **Never exceed pressure and temperature limits.** Refer to data tag on the valve assembly.

Installation:

1. Ensure all lines are free and clear of dirt or debris. Clean threaded or gasketed surfaces if required.

2. Take note of flow direction marked on valve body. For throttling control, flow direction should be under the seat. Flow direction for quick opening trim may be installed either over or under the seat.

3. For flanged connections, use proper gaskets between flange and pipeline application. Always follow proper bolting and torque procedures. For threaded NPT connections, follow proper piping procedures, use a suitable thread sealant as required.

4. For actuator pressure connections, use 1/4”-18 NPT thread. Connect supply pressure to the actuator. *Do not exceed pressure limits. For Size 9 actuator, max input is 50 psig. For size 12 actuator, max input is 50 psig.

5. Once supply pressure is connected, cycle the valve to verify correct operation and positioning.

Spring Adjustments:

Spring adjustments may be required in order to obtain a fully open or fully closed position, or to prevent trim leakage.

Fail Closed Actuator:

1. First back off the adjusting locknut (18) on the top of the actuator assembly. In order to increase the spring tension and seating, turn the Adjustment Screw (19) in a clockwise rotation. Reduce the spring load by turning the Adjustment Screw in a counter clockwise rotation. Once final adjustments are made, secure by tightening the adjusting locknut.

Fail Open Actuator:

1. Loosen off the three set screws (14), in order to remove the Spring Cover Assembly (16).
2. To increase spring tension, turn the Adjustment Hex Nut (17) in a clockwise rotation. To reduce the spring tension, turn the Adjustment Hex Nut counter clockwise.
3. Replace the Spring Cover Assembly and secure by tightening the set screws.

Adjustments should be made only to allow the valve to operate in a fully open position at operating pressure. Further adjustments past this may result in improper seating or trim leakage.

MAINTENANCE

Certain operating conditions may require increased inspection intervals. Valve components are subject to normal wear and tear; regular inspection intervals are recommended.

****Note: Prior to any maintenance or repairs ensure all proper safety and lockout procedures are followed.** The process should be isolated and all supply lines to the actuator should be shut down and purged to prevent accidental operation of the assembly when performing maintenance or repairs.

Actuator Disassembly, Fail Open:

1. Disconnect the supply to the actuator.
2. Back off the Set Screws (14) so the Spring Cover Assembly (16) may be removed.
3. Remove all spring tension by turning the Adjustment Hex Nut (17) counter clockwise.
4. The Adjustment Hex Nut (17), Spring Retainer (19) and Spring (20) may now be removed.
5. Remove the Upper Diaphragm Housing (26) by first removing the Hex Cap Screws (27) and Hex Nuts (29) from around the diaphragm housing. Carefully lift the upper diaphragm housing upwards off Stem.
6. Separate the Upper Stem (21) from Valve Stem (6) by removing the Cotter Pin (23) and unscrewing the upper stem.
7. Remove Bearing Washer (13), Actuator Diaphragm (28), Diaphragm Plate (12), and Hex Nut (31).
8. The Lower Diaphragm Housing (30) may be removed if required by unscrewing from the Bonnet Assembly (10).

Inspect all items and clean or replace if necessary. Assemble in reverse order. Use a suitable O-Ring lubricant when replacing O-Rings.

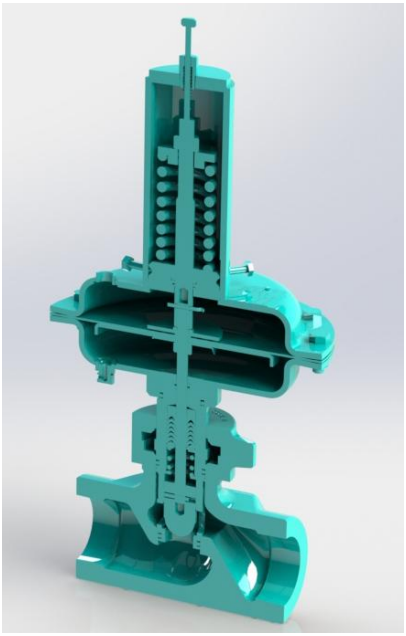

Actuator Disassembly, Fail Closed:

1. Disconnect the supply to the actuator.

2. Loosen the Adjustment Lock Nut (18) and remove all spring tension by loosening the Adjustment Screw (19). (turn counter clockwise to loosen)

3. Separate Upper Diaphragm (17) from Lower Diaphragm Housing (15) by removing the 12 Hex Cap Screws (28) and Hex Nuts (29). Upper Diaphragm Housing, Spring (22), and Upper Spring Retainer (21) may now be lifted off.

4. Remove 2 Hex Nuts (30) securing the Diaphragm Plate (20). Once removed, the Actuator Diaphragm (16) may be removed and inspected.

5. If required, the Yoke may be unscrewed from the Bonnet Assembly (9).

Inspect all items and clean or replace if necessary. Assemble in reverse order. Use a suitable O-Ring lubricant when replacing O-Rings.

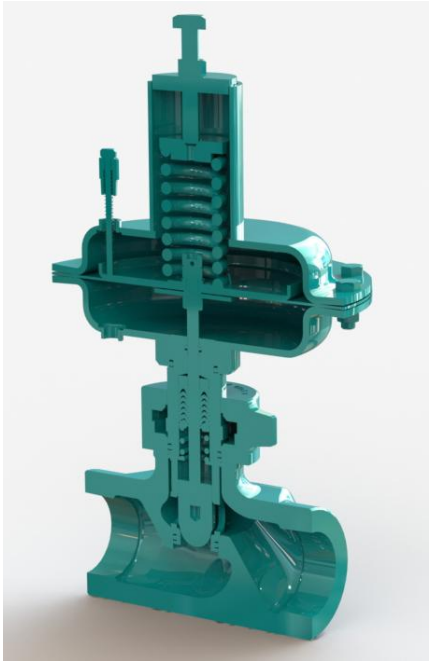

CVS Series 2220 – Reverse Acting

Valve Disassembly

Take special care when disassembling valve components to not damage surfaces.

The following instructions allow inspection and repair of the valve components without fully disassembling the actuator assembly. The actuator assembly of the CVS Series 2220 is easily removed from the valve body by unscrewing the hammer nut.

****Note: Prior to any maintenance or repairs ensure all proper safety and lockout procedures are followed.** The process should be isolated and all supply lines to the actuator should be shut down and purged to prevent accidental operation of the assembly when performing maintenance or repairs.

1. Disconnect the supply to the actuator.

2. Remove all actuator spring tension:

Fail Closed: Loosen Adjustment Screw Locknut and turn Adjustment Screw counter clockwise to loosen and remove spring tension.

Fail Open: Loosen Set Screws holding Spring Cover Assembly. Remove the Spring Cover Assembly. Loosen Adjustment Hex Nut turning counter clockwise to remove spring tension.

3. Remove Hammer Nut (4, Reverse)(35, Direct), by tapping lugs with hammer in a counter clockwise rotation.

4. The Bonnet Assembly, Actuator, Stem and Plug may now be lifted off carefully and set aside in order to inspect and repair if required. Take care to avoid damaging components or bending stem.

5. Use a punch tool to remove the Drive Pin that secures the Plug to the Valve Stem

6. Remove the Seat and Cage from the Valve Body

Trim Inspection and Maintenance

1. Inspect Valve Plug and Seat for signs of wear and damage from erosion. Certain minor abrasions may be able to be repaired, while excessive damage will most likely affect operation and sealing capabilities of the valve. Utilize magnifying glass to ensure surface finish is acceptable, or is in need of replacement component.

2. Now inspect the Plug and Seat for sealing irregularities. With the Plug and Seat together, determine if any gaps are visible on the seating surface by holding to light and looking through seating area. If light is visible, it is an indication the seating surface may have wear or damage. Again, determine if surfaces may be restored by re-lapping, or if a replacement component is required.

3. The Stem surface should be inspected, and show no signs of scratches, wear or damage. Specifically inspect the Stem area around the Packing and O-Ring areas. Repair or replace as required.

Restoring Trim – Lapping

Clean and dry all components prior to lapping.

1. Select appropriate lapping compound based on trim materials in the application.

2. Apply small amount of lapping compound to three separate areas on seating surface of the plug. Do not use too much lapping compound as it may cause uneven surface lapping.

3. Fit the Seat and Plug together and rotate the Plug or Seat in a back and forth motion.

4. Once complete, clean and inspect the surfaces for any signs of wear or damage again. Reseat the Plug and Seat once again and inspect for gaps as mentioned in trim inspection above.

5. Determine if re lapping is required or if replacement parts are needed.

- Reassemble Valve and Actuator assembly in reverse order.
- Lubricate O-Rings prior to re-installing.

For repair kits or replacement parts, please contact a CVS Controls Ltd. sales representative.

Actuator						
Number	Maximum Working Pressure		Effective Area/Size		Travel	
	psig	bar	Sq In	Cm Sq	In	mm
9	55	3.8	35	226	0.625	15.9
12	55	3.8	70	452	0.625	15.9

Flow Coefficients													
Body Size		Trim Size		Cv - Flow Coefficient – Globe Body Percent of Total Travel - Valve Opening									
				Modified Percentage (Flow Up) Throttle									
In	mm	In	mm	10	20	30	40	50	60	70	80	90	100
1	25	0.25	6.4	.284	.506	.657	.767	.875	.989	1.10	1.20	1.32	1.43
		0.38	9.5	.311	.621	.942	1.28	1.64	2.07	2.51	2.93	3.35	3.70
		0.50	12.7	.557	1.11	1.68	2.26	2.92	3.62	4.30	4.98	5.43	5.60
		0.75	19.1	.752	1.57	2.43	3.42	4.58	6.08	7.93	9.71	10.6	11.0
		1.00	25.4	.983	2.01	3.40	6.12	8.90	11.7	13.5	14.4	15.1	15.4
2	50	0.25	6.4	.284	.506	.657	.767	.875	.989	1.10	1.20	1.32	1.43
		0.38	9.5	.311	.621	.942	1.28	1.64	2.07	2.51	2.93.	3.35	3.70
		0.50	12.7	.592	1.17	1.76	2.34	2.95	3.70	4.57	5.50	5.95	6.08
		0.75	19.1	.882	1.76	2.76	3.82	5.05	6.57	8.49	10.8	12.2	12.9
		1.00	25.4	1.01	2.02	3.58	6.45	9.38	12.32	13.7	15.4	16.7	17.1

Plug Materials	
Standard	Option
17-4 DHT 1150	Tungsten Carbide

Shutoff Classification	
Metal Seat	ANSI Class IV Leakage less than 0.01% of max valve capacity.

Plug Flow Characteristic and Sizing			
Size		Quick Opening	Modified Percentage Throttle
In	mm		
0.19	4.7		
0.25	6.4	Yes	Yes
0.38	9.4	Yes	Yes
0.50	12.7	Yes	Yes
0.75	19.1	Yes	Yes
1.00	25.4	Yes	Yes
1.25	31.75	Yes	

Maximum Differential Pressure: 3 to 15 psi

(Actuator 9, Spring AA 3-11 psi and Actuator 12, Spring HA 3-15 psi)

Trim Size		Actuator	Supply Pressure		Flow Under Seat				Flow Over Seat			
					Throttle				Quick Open			
					Direct		Reverse		Direct		Reverse	
In	mm	Number	psig	bar	psig	bar	psig	bar	psig	bar	psig	bar
.25	6.4	9	20	1.4	2610	180	4750	327	6250	431	6250	431
			30	2.0	6250	431	6250	431	6250	431	6250	431
		12	20	1.4	6250	431	6250	431	6250	431	6250	431
			30	2.0	6250	431	6250	431	6250	431	6250	431
.38	9.5	9	20	1.4	1050	72	1975	136	6250	431	6250	431
			30	2.0	4220	291	5150	355	6250	431	6250	431
		12	20	1.4	3695	255	5550	383	6250	431	6250	431
			30	2.0	6250	431	6250	431	6250	431	6250	431
.50	12.7	9	20	1.4	530	36	1050	672	6250	431	6250	431
			30	2.0	2315	160	2850	197	6250	431	6250	431
		12	20	1.4	2015	139	3060	211	6250	431	6250	431
			30	2.0	5580	385	6250	431	6250	431	6250	431
.75	19.1	9	20	1.4	180	12	420	29	2400	166	1700	117
			30	2.0	975	67	1210	83	3460	239	1700	117
		12	20	1.4	840	58	1315	91	4520	312	2975	205
			30	2.0	2415	167	2900	200	6250	431	5090	351
1.00	25.4	9	20	1.4	70	5	205	14	1215	84	780	54
			30	2.0	515	35	650	45	1730	119	780	54
		12	20	1.4	440	30	710	49	2255	155	175	12
			30	2.0	1330	92	1600	110	3290	227	2230	161

Maximum Differential Pressure: 6 to 30 psi

(Actuator 9, Spring HA 6-30 psi and Actuator 12, Spring WM 6-30 psi)

Trim Size		Actuator	Supply Pressure		Flow Under Seat				Flow Over Seat			
					Throttle				Quick Open			
					Direct		Reverse		Direct		Reverse	
In	mm	Number	psig	bar	psig	bar	psig	bar	psig	bar	psig	bar
.25	6.4	9	33	2.3			6250	431	6250	431		
		12			6250	431	6250	431	6250	431	6250	431
.38	9.5	9	33	2.3			3300	228	6250	431		
		12			3955	273	5855	404	6250	431	6250	431
.50	12.7	9	33	2.3			1804	124	6250	431		
		12			2165	149	3200	221	6250	431	6250	431
.75	19.1	9	33	2.3			751	52	3165	218		
		12			905	62	1380	95	6250	431	285	20
1.0	25.4	9	33	2.3			393	27	1525	105		
		12			480	33	745	51	3600	248	175	12

ASSEMBLY

CVS Series 2220 – ATC/Fail Open (Direct Acting) – 1 and 2 Inch

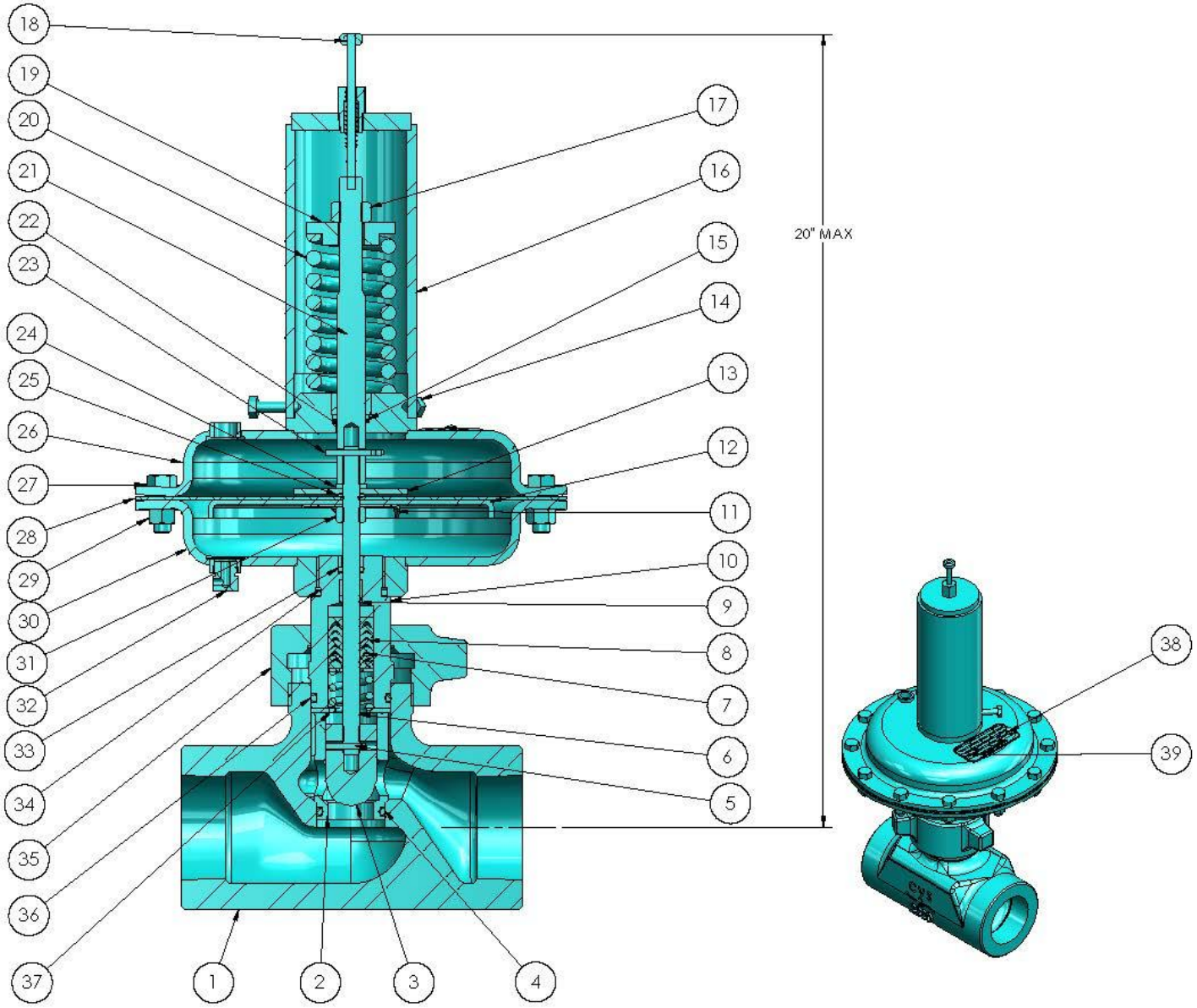

CVS Series 2220 Fail Open – 1 and 2 Inch

Item	Part Number	Description	Qty
1	Contact CVS	Valve Body, LCC	1
2	See Table*	Seat/Cage (Note 3, page 14)	1
3	See Table*	Valve Plug, (Note 3, page 14)	1
4	CVS 490222A129*	Seat, O-Ring, HSN (Note 1)	1
5	CVS 490222A219*	Drive Pin Grooved	1
6	CVS 490222A115	Valve Stem	1
7	CVS 490222A109	Packing Spring	1
9	CVS 490222A164	Guide Bushing	1
10	CVS 490222A114	Bonnet Assembly	1
11	CVS 490222A179	Lower Retainer	1
12	CVS 490222A116	Diaphragm Plate	1
13	CVS 490222A121	Washer Bearing	1
14	CVS 450323A211	Screw, Hex	3
15	CVS 490222A143	Diaphragm O-Ring, HSN (Note 1)	1
16	CVS 490222A150	Spring Cover Assy	1
17	CVSB 0442-0502	Hex Nut	1
18	CVS 490222A123	Indicator/Vent	1
19	CVS 490222A134	Upper Spring Retainer	1
20	CVS 490222A117	Actuator Spring	1
21	CVS 490222A154	Actuator Upper Stem	1
22	CVS 490222A144	Backup Ring	1
23	CVS 490222A157	Clevis Cotter Pin	1
24	CVSB-2175-0370	Lockwasher, 3/8	1
25	CVS 490222A133	Diaphragm O-Ring, HSN (Note 1)	1
26	CVS 490222A148	Upper Diaphragm Housing Assy	1
27	CVSB-0070-0372-0100	Hex Cap Screw	12
28	CVS 490222A126LT	Actuator Diaphragm, Neo Nylon	1
29	CVSB-0350-0372	Hex Nut	12
30	CVS 490222A145	Lower Diaphragm Housing	1
31	CVSB-0350-0372	Hex Nut	1
32	CVS 490222A120	Plug Breather	1
33	CVS 490222A132	Ret/Stem O-Ring, HSN (Note 1)	1
34	CVS 490222A131	Bonnet O-Ring, HSN (Note 1)	1
35	CVS 490222A110	Hammer Nut A350 LF2	1
36	CVS 490222A130	Plug Packing O-Ring, HSN (Note 1)	1
37	CVS 490222A218	Packing Washer	1
	CVS 490222A113	Upper Retainer	1
	CVS 490222A112	Packing Set, (TFE Note 2)	1
	CVS 490222A180	Lower Retainer	1
38	CVS 490222A181	Name Tag	1
39	CVSB-2290-0020-0018	Rivet Pin	2

*Items 2, 3, 4 and 5 Sold as Trim Kit Sets Only
Note 1: Only sold as part of an oring kit – P/N CVS 490222A127
Note 2: Optional cotton/nitrile packing available – P/N 1-2200-50/CN

Item 2, Quick Open Seat + Cage		
Part Number	Material	Port Size (in)
CVS 490222A095	17-4PH DHT 1150	1/4
CVS 490222A096		3/8
CVS 490222A097		1/2
CVS 490222A098		3/4
CVS 490222A099		1.00
CVS 490222A074		1-1/4
CVS 490222A161	Tungsten Carb 17-4 SST DHT 1150	1/4
CVS 490222A158		3/8
CVS 490222A162		1/2
CVS 490222A141		3/4
CVS 490222A167-1		1” Set

Item 3,Quick Open Plug		
Part Number	Material	Port Size (in)
CVS 490222A090	17-4PH DHT 1150	1/4
CVS 490222A091		3/8
CVS 490222A092		1/2
CVS 490222A093		3/4
CVS 490222A094		1.00
CVS 490222A073		1-1/4
CVS 490222A140	Tungsten Carb 17-4 SST DHT 1150	1/4
		3/8
		1/2
		3/4
CVS 490222A167-1		1

CVS Series 2220 ATO/Fail Closed (Reverse Acting) – 1 and 2 Inch

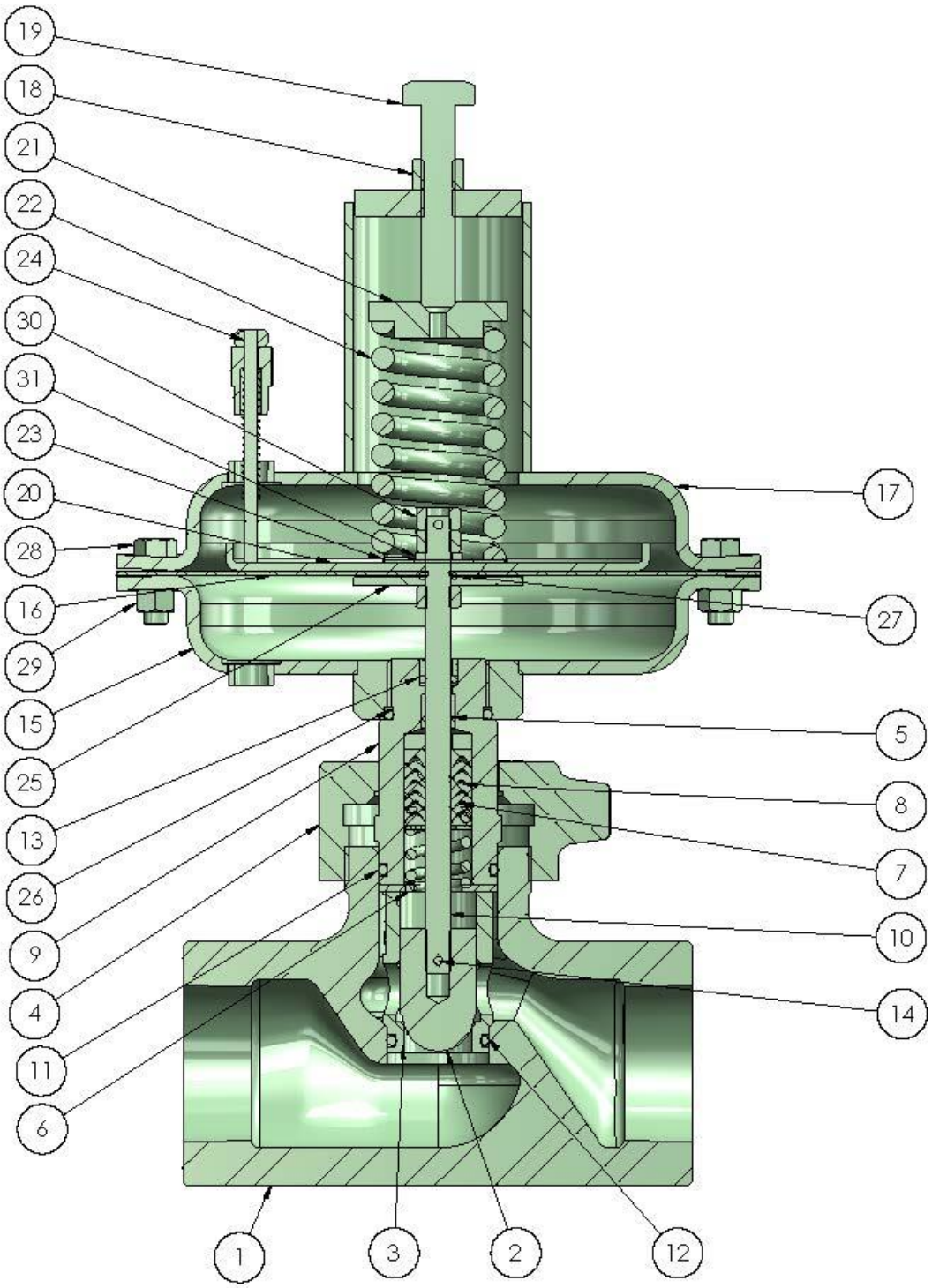

CVS Series 2220 Fail Closed – 1 and 2 Inch

Item	Part Number Size 9	Part Number Size 12	Description	Qty
1	Contact CVS		Valve Body	1
2	See Table		Valve Plug (Note 3 next page)	1
3	See Table		Seat/Cage, (Note 3 next page)	1
4	CVS 490222A110		Hammer Nut	1
5	CVS 490222A164		Guide Bushing	1
6	CVS 490222A218		Packing Washer	1
7	CVS 490222A109		Packing Spring, Inconel	1
8	CVS 490222A113		Upper Retainer	1
	CVS 490222A112		Packing Set, TFE (Note2)	1
	CVS 490222A180		Lower Retainer	1
9	CVS 490222A114		Bonnet Assembly	1
10	CVS 490222A115		Valve Stem	1
11	CVS 490323A130		Plug Packing O-Ring, HSN (Note 1)	1
12	CVS 490222A129		Seat O-Ring, HSN (Note 1)	1
13	CVS 490222A132		Retainer/Stem O-Ring, HSN (Note 1)	1
14	CVS 490222A219		Drive Pin, Grooved	1
15	CVS 490222A145	CVS 490222A147	Lower Diaphragm Housing	1
16	CVS 490222A126LT	CVS 490207A127	Actuator Diaphragm	1
17	CVS 490222A163	CVS 490222A188	Upper Diaphragm Housing	1
18	CVSB-0350-0501	CVSB 0350-0621	Hex Nut(No 9), (No 12)	1
19	CVSB-0194-0501-0300	CVSB 0194-0501-0350	Sq Head Bolt, (No 9), (No 12)	1
20	CVS 490222A116	CVS 490222A160	Diaphragm Plate	1
21	CVS 490222A122	CVS 490222A198	Upper Spring Retainer	1
22	CVS 490222A117	CVS 490222A199	Actuator Spring	1
23	CVS 490222A179	CVS 490222A200	Lower Retainer	1
24	CVS 490222A123		Indicator/Vent	1
25	CVS 490222A121		Washer Bearing	1
26	CVS 490222A131		Bonnet O-Ring, HSN (Note 1)	1
27	CVS 490222A133		Diaphragm O-Ring, HSN (Note 1)	1
28	CVSB-0070-0372-0100		Hex Cap Screw	12
29	CVSB-0350-0372		Hex Nut	12
30	CVSB-0350-0372		Hex Nut	3
31	CVSB-2175-0370		Lock Washer	1

Note 1: Only sold as part of an oring kit – P/N CVS 490222A127

Note 2: Optional cotton/nitrile packing available – P/N 1-2200-50/CN

Item 2, Quick Open Seat + Cage		
Part Number	Material	Port Size (in)
CVS 490222A095	17-4PH DHT 1150	1/4
CVS 490222A096		3/8
CVS 490222A097		1/2
CVS 490222A098		3/4
CVS 490222A099		1.00
CVS 490222A074		1-1/4
CVS 490222A161	Tungsten Carb 17-4 SST DHT 1150	1/4
CVS 490222A158		3/8
CVS 490222A162		1/2
CVS 490222A141		3/4
CVS 490222A167-1		1” Set

Item 3,Quick Open Plug		
Part Number	Material	Port Size (in)
CVS 490222A090	17-4PH DHT 1150	1/4
CVS 490222A091		3/8
CVS 490222A092		1/2
CVS 490222A093		3/4
CVS 490222A094		1.00
CVS 490222A073		1-1/4
CVS 490222A140	Tungsten Carb 17-4 SST DHT 1150	1/4
		3/8
		1/2
		3/4
CVS 490222A167-1		1

DIMMENSIONS

Actuator Dimensions

Body Size		Actuator	Spring	Dimension A		Dimension B				Fail Open Spring Cover Clearance required	
				Actuator Diameter		Fail Closed		Fail Open			
In	mm			In	mm	In	Mm	In	mm	In	mm
1	25	9	AA	9.5	241	9.75	248	10.25	260	5.5	140
2	50		HA			11.50	292	11.75	298	7.00	178
1	25	12	HA	12.5	318	10.88	276	11.75	298	7.00	178
2	50		WM*			14.62	371	14.38	365	10.00	254

*Special order only. Contact a CVS sales representative.

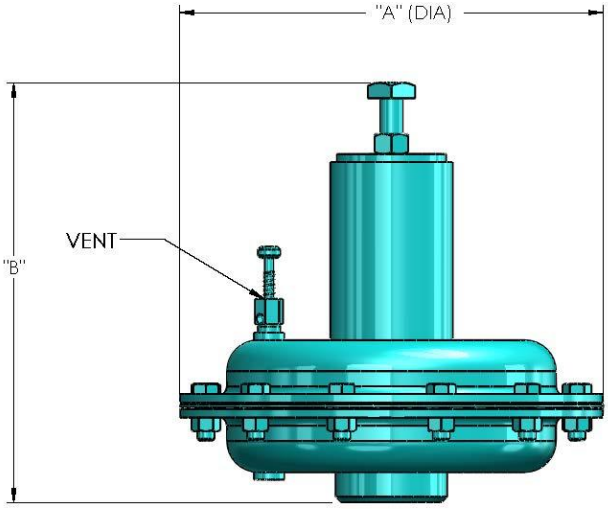

CVS Series 2220 Fail Closed

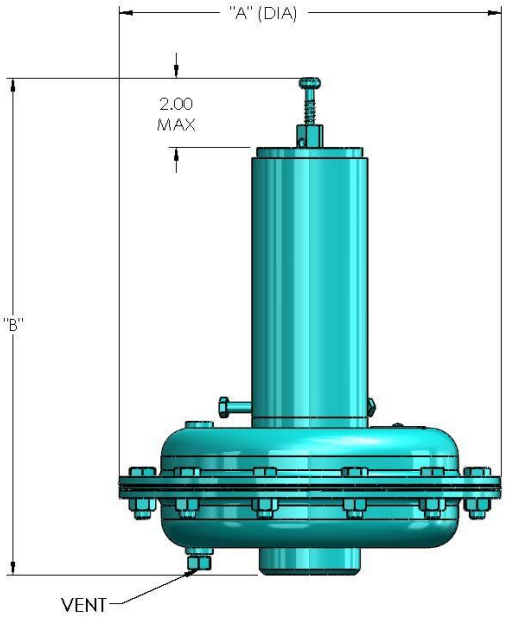

CVS Series 2220 Fail Open

NOTE 3 - Trim Kit – Consists of: Plug, Seat/Cage, Seat Oring and Drive Pin		
Material 17-4PH DHT 1150		
1/4” Orifice	CVS 490222A001	Quick Open
3/8” Orifice	CVS 490222A002	Quick Open
1/2” Orifice	CVS 490222A003	Quick Open
3/4" Orifice	CVS 490222A004	Quick Open
1” Orifice	CVS 490222A005	Quick Open
1-1/4” Orifice	CVS 490222A006	Quick Open
Material Tungsten Carbide / 17-4PH DHT 1150		
1/4" Orifice	CVS 490222A021	Quick Open
3/8” Orifice	CVS 490222A022	Quick Open
1/2" Orifice	CVS 490222A023	Quick Open
3/4" Orifice	CVS 490222A024	Quick Open
1” Orifice	CVS 490222A025	Quick Open
Material 17-4 DHT 1150		
1/4" Orifice	CVS 490222A011	Modified Equal Percent (Throttle)
3/8” Orifice	CVS 490222A012	Modified Equal Percent (Throttle)
1/2" Orifice	CVS 490222A013	Modified Equal Percent (Throttle)
3/4" Orifice	CVS 490222A014	Modified Equal Percent (Throttle)
1” Orifice	CVS 490222A015	Modified Equal Percent (Throttle)

DIMMENSIONS

Body Dimensions

Body Size		Face to Face - F								G	
		Connection Type	ASME Rating								
			150		300		600		900/1500		
In	mm		In	mm	In	mm	In	mm	In	mm	In	mm
1.00	25	NPT							6.25	159	4.88	124
		RF	7.25	184	7.75	197	8.25	210	9.38	238		
		RTJ	7.75	197	8.25	210	8.25	210	9.38	238		
2.00	50	NPT							7.50	191		
		RF	10.00	254	10.50	267	11.25	286	12.88	413		
		RTJ	10.50	267	11.13	283	11.38	289	13.00	418		

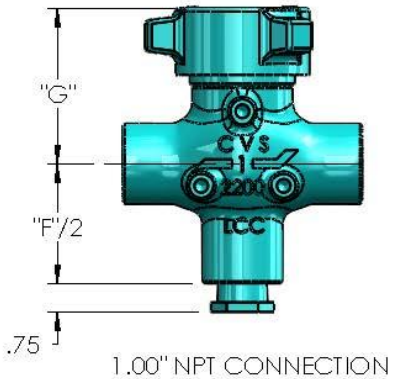

1.00" NPT CONNECTION

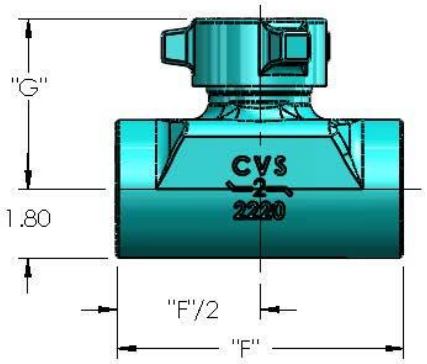

2.00" NPT CONNECTION

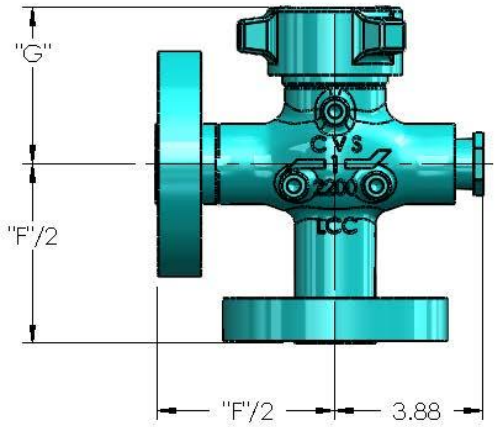

1.00" "T" BODY

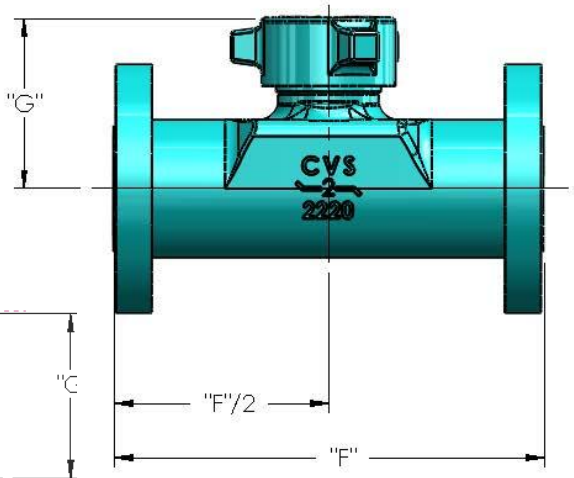

2.00" GLOBE BODY

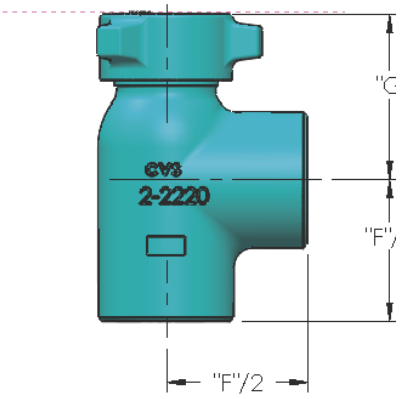

2.00" ANGLE BODY

Head Office
1107 8A Street
Nisku, Alberta
T9E 7R3
Canada
Office: (780) 437-3055

Calgary Sales Office
3516 114 Avenue SE
Calgary, Alberta
T2Z 3V6
Canada
Office: (403) 250-1416
Fax: (403) 291-9487

Website: www.cvs-controls.com

Email: info@cvs-controls.com

CVS Controls Ltd. strives for the highest levels of quality and accuracy. The information included in this publication is presented for informational purposes only. CVS Controls Ltd. reserves the right to modify or change, and improve design, process, and specifications without written notice. Under no circumstance is the information contained to be interpreted to be a guarantee/warranty with regard to our products or services, applicability or use.

Selection, use and maintenance are the sole responsibility of the end user and purchaser. CVS Controls assumes no liability for the selection use and maintenance of any product.

June 2026