CVS Series 657 Actuator Dimensions

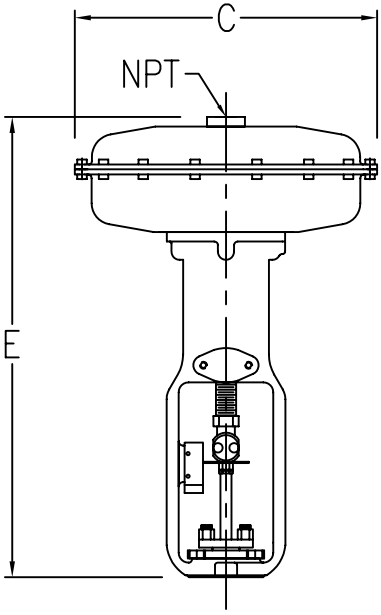

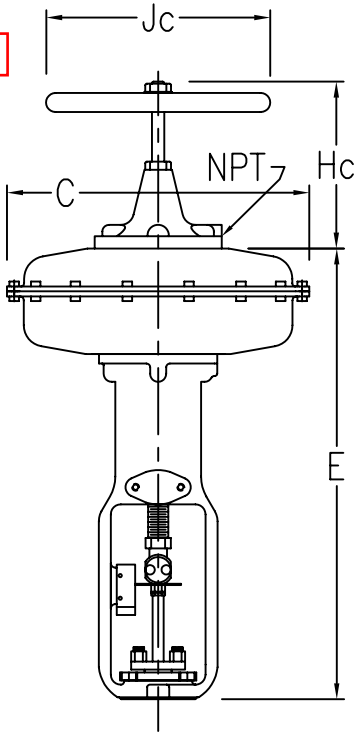

		E	C	Jc	Hc	NPT
SIZE	30	17 5/16	11 3/8	6 3/4	4 3/4	1/4 – 18
	34	19 5/8	13 1/8	8 3/4	6 7/16	1/4 – 18
	40	21 9/16	13 1/8	8 3/4	6 7/16	1/4 – 18
	45	25 15/16	16	8 3/4	7 15/16	1/4 – 18
	46	25 15/16	18 5/8	8 3/4	7 15/16	1/4 – 18
	60	28 7/16	18 5/8	8 3/4	7 15/16	1/4 – 18
	70	33 1/16	21 1/8	14	12 5/16	1/2 – 14

Inches